PART NUMBER PP MNL1903, REV. C (02/22)

randell

OPERATOR MANUAL

IMPORTANT INFORMATION, KEEP FOR OPERATOR

888-994-7636, fax 888-864-7636
unifiedbrands.net

unified brands

THIS MANUAL MUST BE RETAINED FOR FUTURE REFERENCE. READ, UNDERSTAND AND FOLLOW THE INSTRUCTIONS AND WARNINGS CONTAINED IN THIS MANUAL.

FOR YOUR SAFETY Do not store or use gasoline or other flammable vapors and liquids in the vicinity of this or any other appliance.

WARNING R290 flammable refrigerant in use. Improper installation, adjustment, alteration, service or maintenance can cause property damage, injury or death. Read the installation, operating and maintenance instructions thoroughly before installing or servicing this equipment.

NOTIFY CARRIER OF DAMAGE AT ONCE It is the responsibility of the consignee to inspect the container upon receipt of same and to determine the possibility of any damage, including concealed damage. Unified Brands suggests that if you are suspicious of damage to make a notation on the delivery receipt. It will be the responsibility of the consignee to file a claim with the carrier. We recommend that you do so at once.

Manufacture Service/Questions 888-994-7636.

This manual provides information for:

8000D-290 SERIES PREP TABLES

RETAIN THIS MANUAL FOR FUTURE REFERENCE

NOTICE: Due to a continuous program of product improvement, Unified Brands reserves the right to make changes in design and specifications without prior notice.

NOTICE: Please read the entire manual carefully before installation. If certain recommended procedures are not followed, warranty claims will be denied.

MODEL NUMBER _____

SERIAL NUMBER _____

INSTALLATION DATE _____

The serial number is located behind the hinged vented door of the compressor machine compartment. An example is shown here.

randell

SERIAL NUMBER **XXXXXXXXX**
MODEL NUMBER **XXXXXXXXX**
DESCRIPTION

EQUIPMENT DESCRIPTION

MODEL	PAN CAPACITY 1/3 SIZE	L	D	H			DOORS	STORAGE CU. FT.	HP	VOLT	AMPS	NEMA	SHIP WT.
				WORK SURFACE	FRONT OF TOP RAIL	OVERALL (COVER OPEN)							
8148D-290	11	48”	33”	35”	53.5”	64”	(1)24”	6.21	(1)1/3, (1)1/4	115/60/1	5.8	5-15P	495
8272D-290	17	72”	33”	35”	53.5”	64”	(2)27”	14.4	(1)1/3, (1)1/4	115/60/1	5.8	5-15P	725
8396D-290	25	96”	33”	35”	53.5”	64”	(1)24”, (2)27”	20.61	(1)1/3, (1)1/4	115/60/1	5.8	5-15P	925

NSF c UL us MADE IN USA

Information contained in this document is known to be current and accurate at the time of printing/creation. Unified Brands recommends referencing our product line websites, unifiedbrands.net, for the most updated product information and specifications. © 2022 Unified Brands. All Rights Reserved.

IMPORTANT - READ FIRST - IMPORTANT

INTERIOR EVAPORATOR COVER

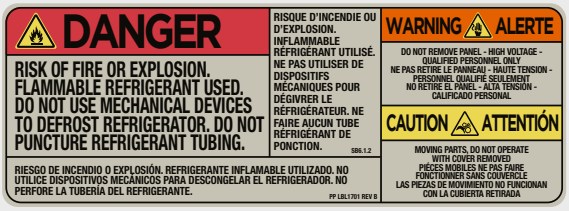

EXTERIOR OF UNIT

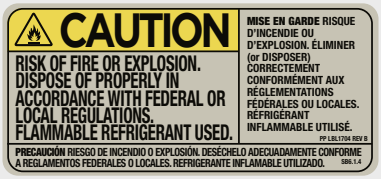

NEAR EXPOSED REFRIGERANT TUBING

NEAR MACHINE COMPARTMENT AND NAMEPLATE

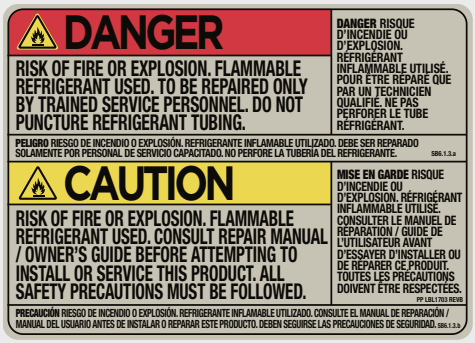

INSTALLATION

CAUTION: THIS UNIT CONTAINS R290 FLAMMABLE REFRIGERANT. USE CAUTION WHEN HANDLING MOVING AND USE OF THE REFRIGERATOR OR FREEZER. AVOID DAMAGING THE REFRIGERANT TUBING OR INCREASE THE RISK OF A LEAK.

WARNING: FAILURE TO FOLLOW INSTALLATION GUIDELINES AND RECOMMENDATIONS MAY VOID THE WARRANTY ON YOUR UNIT.

WARNING: IT IS IMPORTANT THAT YOUR UNIT HAS ITS OWN DEDICATED LINE. CONDENSING UNITS ARE DESIGNED TO OPERATE WITH A VOLTAGE FLUCTUATION OF PLUS OR MINUS 10% OF THE VOLTAGE INDICATED ON THE UNIT DATA TAG. BURN OUT OF A CONDENSING UNIT DUE TO EXCEEDING VOLTAGE LIMITS WILL VOID THE WARRANTY.

THE DANFOSS CONTROLLER HAS LOW VOLTAGE PROTECTION AND WILL NOT OUTPUT VOLTAGE TO THE COMPRESSOR IF VOLTAGE IS LESS THAN 104V.

WARNING: IT IS IMPORTANT THAT A VOLTAGE READING BE MADE AT THE COMPRESSOR MOTOR ELECTRICAL CONNECTIONS, WHILE THE UNIT IS IN OPERATION TO VERIFY THE CORRECT VOLTAGE REQUIRED BY THE COMPRESSOR IS BEING SUPPLIED. LOW OR HIGH VOLTAGE CAN DETRIMENTALLY AFFECT OPERATION AND THEREBY VOID ITS WARRANTY.

WARNING: EVAPORATOR FANS RUN CONTINUOUSLY WHILE THE BASE IS POWERED ON.

WARNING: THIS UNIT IS INTENDED FOR USE IN LABORATORIES IN COMMERCIAL, INDUSTRIAL, OR INSTITUTIONAL OCCUPANCIES AS DEFINED IN THE SAFETY STANDARD FOR REFRIGERATION SYSTEMS, ASHRAE 15.

SELECTING A LOCATION FOR YOUR NEW UNIT

The following conditions should be considered when selecting a location for your unit:

1. *Floor Load:* The area on which the unit will rest must be level, free of vibration, and suitably strong enough to support the combined weights of the unit plus the maximum product load weight. All casters must be in contact with the floor to support the weight. Casters may require shims in order for the caster to be in contact with the floor. NOTE: If there is a question pertaining to weight load limits, consult the factory at 1-888-994-7636.
2. *Ventilation:* The air cooled self contained unit requires a sufficient amount of cool clean air. Avoid surrounding your unit around other heat generating equipment and out of direct sunlight. Also, avoid locating in an unheated room or where the room temperature may drop below 70° F (21°C) or above 86°F (32°C). Do not place any object that can block the ventilation exhaust from the machine compartment register.
3. *Clearance:* This units clearance requirements are 0 in. at the top, 0 in. at the rear and 0 in. at each side.

INSTALLATION CHECKLIST

After the final location has been determined, refer to the following checklist prior to start-up:

1. Check all exposed refrigeration lines to ensure that they are not kinked, dented, or rubbing together or rubbing against any steel.
2. Check all visible components for any potential damage.
3. Check that the condenser and evaporator fans rotate freely without striking any stationary members.
4. Unit must be property leveled; Check all legs or casters ensure they all are in contact with the floor while maintaining a level work surface. Adjusting bullet feet height or shimming casters may be necessary if the floor is not level. NOTE: Damage to equipment may result if not followed. Unified Brands is not responsible for damage to equipment if improperly installed.
5. Plug unit into power source. Unit will come on. If unit does not turn on, refer to controller operation section of this manual to manually turn on the unit.
6. Allow unit time to cool down to holding temperature. If temperature adjustments are required, the control is located on the front panel. Confirm that the units is holding the desired temperature.
7. If unit has drawers, check drawer to ensure the drawer slides freely and fully extents along with seating in the cabinet properly when closed.
8. Refer to the front of this manual for serial number location. Please record this information in your manual on page 1 now. It will be necessary when ordering replacement parts or requesting warranty service.
9. Allow your unit to operate for approximately 45 minutes before putting in food in the rail. Allow 2 hours for base of the unit to cool down to storage temperature, prior to loading product. NOTE: All motors are oiled and sealed.

ELECTRICAL SUPPLY

The wiring should be done by a qualified electrician in accordance with local electrical codes. A properly wired and grounded outlet will assure proper operation. Please consult the data tag attached to the compressor to ascertain the correct electrical requirements. Supply voltage and amperage requirements are located on the serial number tag located on the rear interior wall.

OPERATION

DAILY OPERATING INSTRUCTIONS

EASY MORNING STARTUP

1. Turn on the condiment rail by pressing and holding the rail control power button until the LED display turns on. Let the unit cool for a minimum of 45 minutes.
2. Load the product pans as needed. The loaded product should be 36ºF or below for best results.

FOOD-SAFE OPERATIONS

1. Closing the lids on the condiment rail during non-peak hours will extend the holding time of food product.
2. The frost above the product pans may come and go during the day -- this is normal. The unit automatically regulates the rail temperature to keep your food safe and fresh.

NIGHTLY ENERGY-SAVING SHUTDOWN

1. Remove the product pans from the upper rail and place in the conveniently located base storage, or any other suitable cold-storage area.
2. Turn off the condiment rail by pressing and holding the rail control power button until the LED display turns off.
3. Remove any food "spillage" or debris, rinse and sanitize rail removing any excess water through the drain system located at the end of the unit into a suitable water tight container.
4. Close the rail lid to minimize dust and debris contamination.
5. The base will continue to operate normally and may be used for overnight storage.

This equipment is intended for use in rooms having an ambient temperature of 30ºC/86ºF or less. (NSF labeling requirement). Contact factory for Spanish instructions at 888.994.7636.

MECHANICAL COMPARTMENT

WARNING: BASE EVAPORATOR FANS ARE ALWAYS IN OPERATION WHEN THE UNIT IS ENERGIZED. DISCONNECT POWER TO THE UNIT PRIOR TO PERFORMING MAINTENANCE.

1. To power on the base, press and hold the base control power button until the LED display turns on. To power on the rail, press and hold the rail control power button until the LED display turns on. The power controls are located above the louver panel. Both upper and lower rail are controlled by controller marked Rail.
2. To power off the base press and hold the base control power button until the LED display turns off. To power off the rail press and hold the rail control power button until the LED display turns off. The power controls are located above the louver panel.
3. The drain valve for the upper rail is found behind the vented door. The rail may be drained by placing a pan under the drain valve and opening the valve. (See Evening Shut Down of Prep Rail).

MORNING STARTUP OF PREP RAIL

1. Unit cleaning may be performed at this time.
2. Turn on unit. See item 2 under the Mechanical Compartment section above for powering on the rail.
3. Allow a minimum 45 minutes for your unit to cool down before loading product. A uniform frost pattern will appear on side walls and bottom of prep rail area.
4. Load the product and proceed with food preparation. NOTE: Product entering unit must be at 35°F +/- 2°F.

EVENING SHUT DOWN OF PREP RAIL

1. Remove product from unit at the end of the day's preparation.
2. Turn off unit. See item 3 under the Mechanical Compartment section above for powering on the rail.
3. Unit cleaning may be performed at this time if the frost has melted off the surface.
4. Once defrosted, the rail drain may be opened to remove any water that has resulted from the defrosting procedure.

WARNING: IT IS RECOMMENDED TO ONLY MAKE CHANGES OF 2 DEGREE INCREMENTS AT A TIME. ALLOW FOR THE UNIT TO OPERATE 24 HOURS BETWEEN ADJUSTMENTS. IF THE 2 DEGREE ADJUSTMENT IS NOT ENOUGH ANOTHER ADJUSTMENT CAN BE MADE. IF THE SETTINGS NEED TO GO ABOVE OR BELOW THIS POINT THERE MAY BE OTHER CONTRIBUTING FACTORS AS TO THE CAUSE OF THE TEMPERATURE VARIANCES, PLEASE CONTACT THE FACTORY AT 1-800-621-8560.

AMBIENT CONDITIONS

Unit is designed for normal operating temperatures between 70° F (21°C) - 86°F (32°C). Operating outside of those temperatures may cause premature product wear or failure.

Unified Brands has attempted to preset the temperature control to ensure that your unit runs at an optimum temperature, but due to varying ambient conditions, including elevation, food type and your type of operation, you may need to alter this temperature using control adjustment until desired temperature is reached.

DANFOSS CONTROLLER OPERATION

LED	FUNCTION
	Compressor energized & Evaporator fan de-energized
	Defrost in progress
	Fans delay after defrost completion
	Evaporator fan energize
	An alarm is occurring
ºC / ºF	Temperature unit

POWER ON / OFF: Press and hold the power button until LED display turns On / Off

MANUAL DEFROST: Press and hold "Defrost" Button

CHANGE SET POINT: To raise temperature

1. Press and hold "Λ" to access set point.
2. When set point start flashing, Press "Λ" to adjust set point.
3. After 30 seconds, the display automatically reverts to showing the current temperature.

CHANGE SET POINT: To lower temperature

1. Press and hold "v" to access set point.
2. When set point start flashing, Press "v" to adjust set point.
3. After 30 seconds, the display automatically reverts to showing the current temperature.

CHANGE FROM ºF /ºC :

1. Press the up/down buttons simultaneously for 5 seconds to access the menu.
2. Password is requested. Password is 000.
3. Press the bottom left button to OK the password.
4. Using the up/down buttons, navigate to the “diS” level. Press the bottom left button to OK the selection.
5. Using the up/down buttons, navigate to the “CFu” level. Press the bottom left button to OK the selection.
   a. “-F” designates Fahrenheit.
   b. “-C” designates Celsius.
6. Press the top left button repeatedly to return to exit and return to the home screen.

DRAINING THE RAIL

1. Open mechanical compartment door
2. Place container under drain valve
3. Open valve until all water has drained
4. Close valve
5. Discard water

DRAWER REMOVAL

1. Fully extend the drawer that is to be removed.
2. Remove product pans from drawer.
3. Lift up the drawer stop tabs on each side of drawer track.
4. Pull drawer out while lifting the tabs.

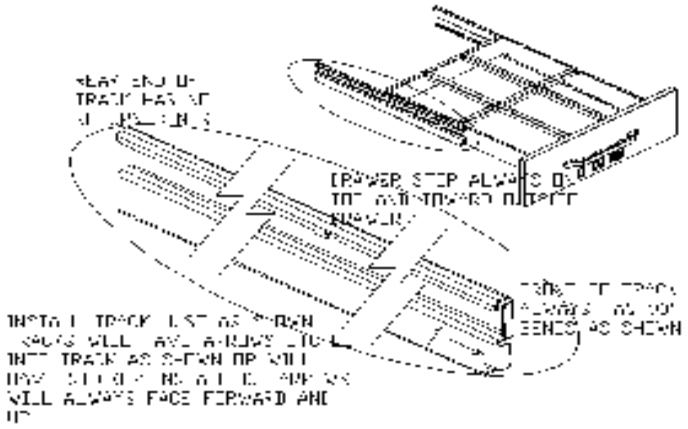

DRAWER INSTALLATION

To remove and re-install individual drawers and drawer tracks, please refer to the figure above for proper installation instructions.

MAINTENANCE

WARNING: DO NOT USE SHARP UTENSILS AND/OR OBJECTS.

WARNING: DO NOT USE STEEL PADS, WIRE BRUSHES, SCRAPERS, OR CHLORIDE CLEANERS TO CLEAN YOUR STAINLESS STEEL.

CAUTION: DO NOT USE ABRASIVE CLEANING SOLVENTS, AND NEVER USE HYDROCHLORIC ACID (MURIATIC ACID) ON STAINLESS STEEL.

WARNING: DO NOT PRESSURE WASH EQUIPMENT AS DAMAGE TO ELECTRICAL COMPONENTS MAY RESULT.

Unified Brands strongly suggests a preventive maintenance program which would include the following monthly, weekly, and daily procedures:

If a failure of the equipment is a direct result of any of the Preventative Maintenance guidelines being neglected, the repairs and parts replacements will not be covered under warranty.

It is recommended that the customer contact the local Authorized Service Agent to provide a quote to perform periodic Preventative Maintenance.

WEEKLY PM PROCEDURES

1. Clean all gaskets on a weekly if not daily basis with a solution of warm water and a mild detergent to extend gasket life. Do not use bleach for cleaning gaskets. Bleach will cause the gaskets to become brittle and not reach their normal life expectancy.
2. Clean and disinfect rail drains with a solution of warm water and mild detergent on a weekly basis. It is recommended to open and close the drain valve as the hot water is flowing through to clean any debris from the internal valve components.

MONTHLY PM PROCEDURES

1. Cleaning of all condenser coils on a monthly basis. Condenser coils are a critical component in the life of the compressor and must remain clean to assure proper air flow and heat transfer. Failure to maintain this heat transfer will affect unit performance and eventually destroy the compressor. Clean the condenser coils with coil cleaner and/or a vacuum, cleaner and brush. NOTE: Brush coil in direction of fins, normally vertically as to not damage or restrict air from passing through condenser.
2. Clean and disinfect drain lines and evaporator pan with a solution of warm water and mild detergent on a monthly basis. Remove clear plastic drain line from plastic tray of condensing unit and place pan under end of drain tube. Discard waste water from pan when cleaning is complete. Re-insert plastic drain tube into position on condensing unit.
3. Remove drawer tracks as per instructions on Drawer Installation guidelines. Once drawers are removed wipe away any debris buildup from the drawer tracks.

   The roller bearings come lubricated from the factory. Excessive oils and or water may remove the oils. It may be required to add lithium grease from time to time on bearings that appear dry.
4. Inspect all silicone seams at interior of the rail and refrigerated base cabinet on a monthly basis. Re-apply food grade silicone sealant as needed to any seams where silicone has peeled away or cracked. Apply silicone to a clean dry surface. Allow sufficient drying time to assure best adhesion of sealant.

RECOMMENDED CLEANERS FOR YOUR STAINLESS STEEL INCLUDE THE FOLLOWING:

JOB	CLEANING AGENT	COMMENTS
Routine cleaning	Soap, ammonia, detergent Medallion	Apply with a sponge or cloth
Fingerprints and smears	Arcal 20, Lac-O-Nu, Ecoshine	Provides a barrier film
Stubborn stains and discoloration	Cameo, Talc, Zud, First Impression	Rub in the direction of the polish lines

Greasy and fatty acids, blood, burnt-on foods	Easy-Off, Degrease It, Oven Aid	Excellent removal on all finishes
Grease and Oil	Any good commercial detergent	Apply with a sponge or cloth
Restoration/Preservation	Benefit, Super Sheen	Good idea monthly

Reference: Nickel Development Institute, Diversey Lever, Savin, Ecolab, NAFEM

Proper maintenance of equipment is the ultimate necessity in preventing costly repairs. By evaluating each unit on a regular schedule, you can often catch and repair minor problems before they completely disable the unit and become burdensome on your entire operation.

For more information on preventive maintenance, consult your local service company or CFESA member. Most repair companies offer this service at very reasonable rates to allow you the time you need to run your business along with the peace of mind that all your equipment will last throughout its expected life. These services often offer guarantees as well as the flexibility in scheduling or maintenance for your convenience. For a complete listing of current Unified Brands ASA please visit www.unifiedbrands.net.

Unified Brands believes strongly in the products it manufactures and backs those products with one of the best warranties in the industry. We believe with the proper maintenance and use, you will realize a profitable return on your investment and years of satisfied service.

REPLACEMENT PARTS

To order parts, contact your Authorized Service Agent. Supply the model designation, serial number, part description, part number, quantity, and when applicable, voltage and phase.

CONTACT US

If you have questions pertaining to the content in this manual, contact Unified Brands at 888-994-7636.

TROUBLESHOOTING

This unit is designed to operate smoothly and efficiently if properly maintained. However, the following is a list of checks to make in the event of a problem. Wiring diagrams are found at the end of this manual. When in doubt, turn unit off and contact service at 888-994-7636 or tsrandell@unifiedbrands.net.

SYMPTOM	POSSIBLE CAUSE	PROCEDURE
Unit does not run	No power to unit	Plug in unit
	Control in OFF position	Turn controller on
	Faulty control	Call for service at 888-994-7636
Unit too cold	Incorrect set point	Adjust control set point
Unit too warm	Door / drawer ajar	Ensure door / drawer is fully closed
	Gasket torn or out of place	Inspect the gasket for wear and position
	Incorrect set point	Adjust control set point
	Warm product introduced to cabinet	Pre-chill product 37ºF
	Ice on the coil	Initiate manual defrost
Unit noisy	Ice on the coil	Initiate manual defrost
Unit does not defrost	Excessive ice on the coil	Initiate manual defrost

SERVICE

CAUTION: COMPONENT PARTS SHALL BE REPLACED WITH FACTORY OEM PARTS. SERVICE WORK SHALL BE DONE BY FACTORY AUTHORIZED SERVICE PERSONNEL, SO AS TO MINIMIZE THE RISK OF POSSIBLE IGNITION DUE TO INCORRECT PARTS OR IMPROPER SERVICE.

CAUTION: BEFORE MAKING ANY REPAIRS, ENSURE THE UNIT IS DISCONNECTED FROM ITS POWER SOURCE.

This piece of equipment uses a R290 Refrigeration system. This equipment has been clearly marked on the serial tag the type of refrigerant that is being used. There is also a warning labels stating that the unit contains R290 refrigerant. R290 is safe to use as long as you follow these warning labels.

No smoking or open flames when servicing this equipment. If needed, use a CO2 or dry-powder type fire extinguisher

Replacement parts used on any R290 Refrigeration system cabinet must have specific UL certification for non-sparking components.

Only authorized service technician, certified in R290 system should service this equipment.

MANIFOLD SET

A R134A manifold set can be used for servicing this equipment.

REFRIGERANT RECOVERY

Follow all national and local regulations for R-290 refrigerant recovery.

LEAKING CHECKING AND REPAIR

Leak check an R-290 system the same way you would an R-134a or R-404A system with the following exceptions.

1. Do not use a Halid leak detector on a R290 system.
2. Electronic leak detector must be designated specifically for combustible gas.

Use of a bubble solution or an ultrasonic leak detector are acceptable.

When repairing a leak, it is recommended using oxygen free dry nitrogen with a trace gas not exceeding 200PSI.

When accessing an R290 system, piercing valves are not to remain on the equipment in a permanent manner. After charge is recovered, Schrader valves are to be installed on the process stubs. Proper charge is to be weighed into the system and the system is to be leak checked afterwards.

The R290 equipment must have red process tubes and other devices through which the refrigerant is serviced, such as any service port. This color marking must remain on the equipment. If marking is removed, it must be replace and extend at least 2.5 centimeters (1”) from the compressor.

CHARGING

Follow the charge amount specified on the data tag. It is recommended to use the shortest hoses possible to prevent undercharging.

- Ensure the system is sealed and leak checked
- Evacuate system to a minimum 500 micron
- Weigh in correct charge
- Leak check the system again
- Bleed the refrigerant from the high side hose to the low side hose
- Disconnect the hoses
- Remove line taps

ELECTRICAL BOX

CALL FACTORY FOR REPLACEMENT PARTS:
888-994-7636

Parts List

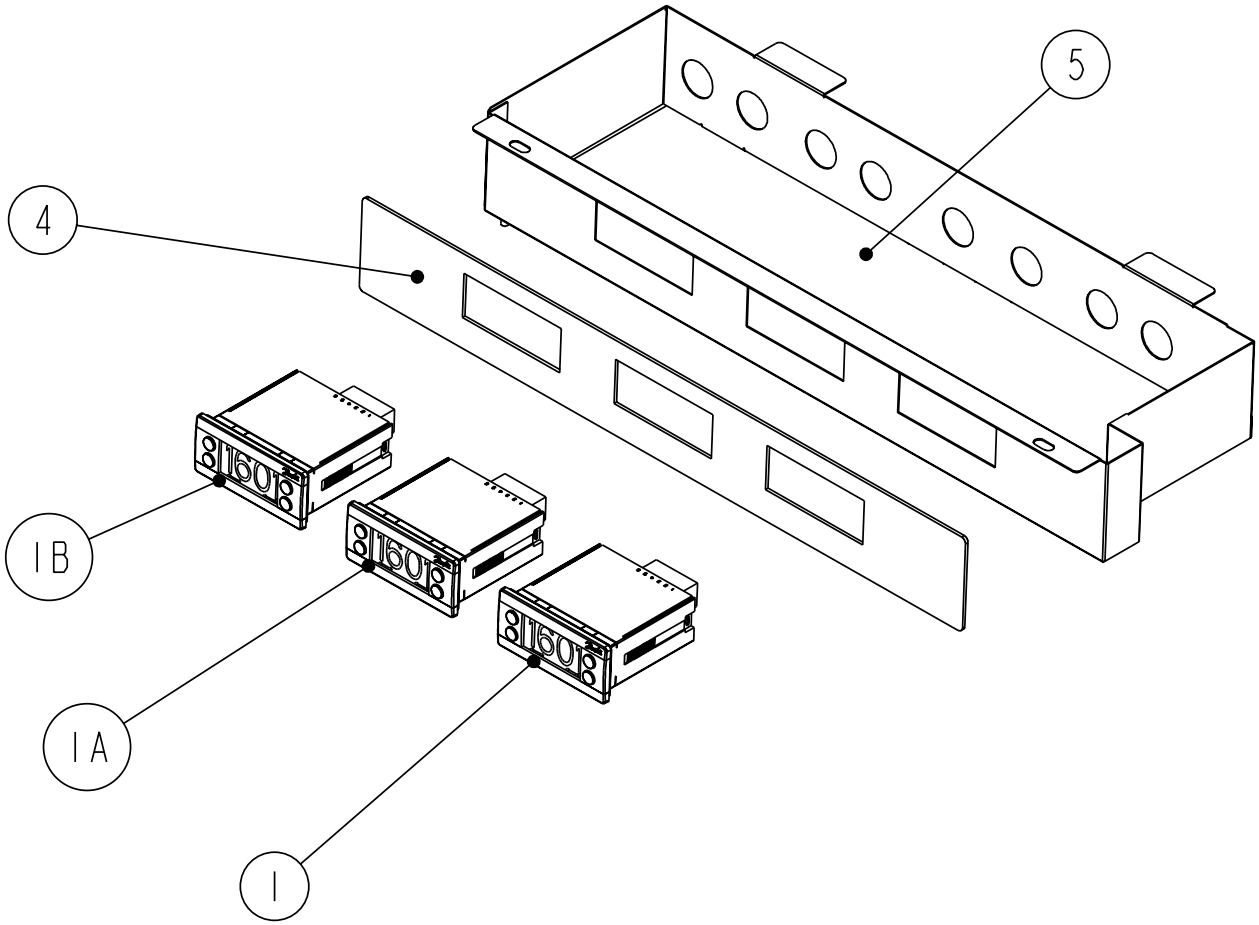

ITEM	SERVICE PART	DESCRIPTION	8148D-290	8272D-290	8396D-290
1	RP CNT1902	CONTROLLER, PROGRAMMED - TOP RAIL	X	X	X
1A	RP CNT1902	CONTROLLER, PROGRAMMED - BOTTOM RAIL	X	X	X
1B	PR CNT1807	CONTROLLER, PROGRAMMED - BASE	X	X	X
2*	RF CNT1602	SENSOR, COIL	X	X	X
3*	RF CNT1603	SENSOR, AIR	X	X	X
4	PP STK1901	OVERLAY	X	X	X
5	RP BOX1901	CONTROL BOX W/ COVER PLATE	X	X	X
5A	RP BOX1902	CONTROL BOX W/ COVER PLATE	-	-	-

* = NOT SHOWN

BASE

CALL FACTORY FOR REPLACEMENT PARTS:
888-994-7636

Parts List

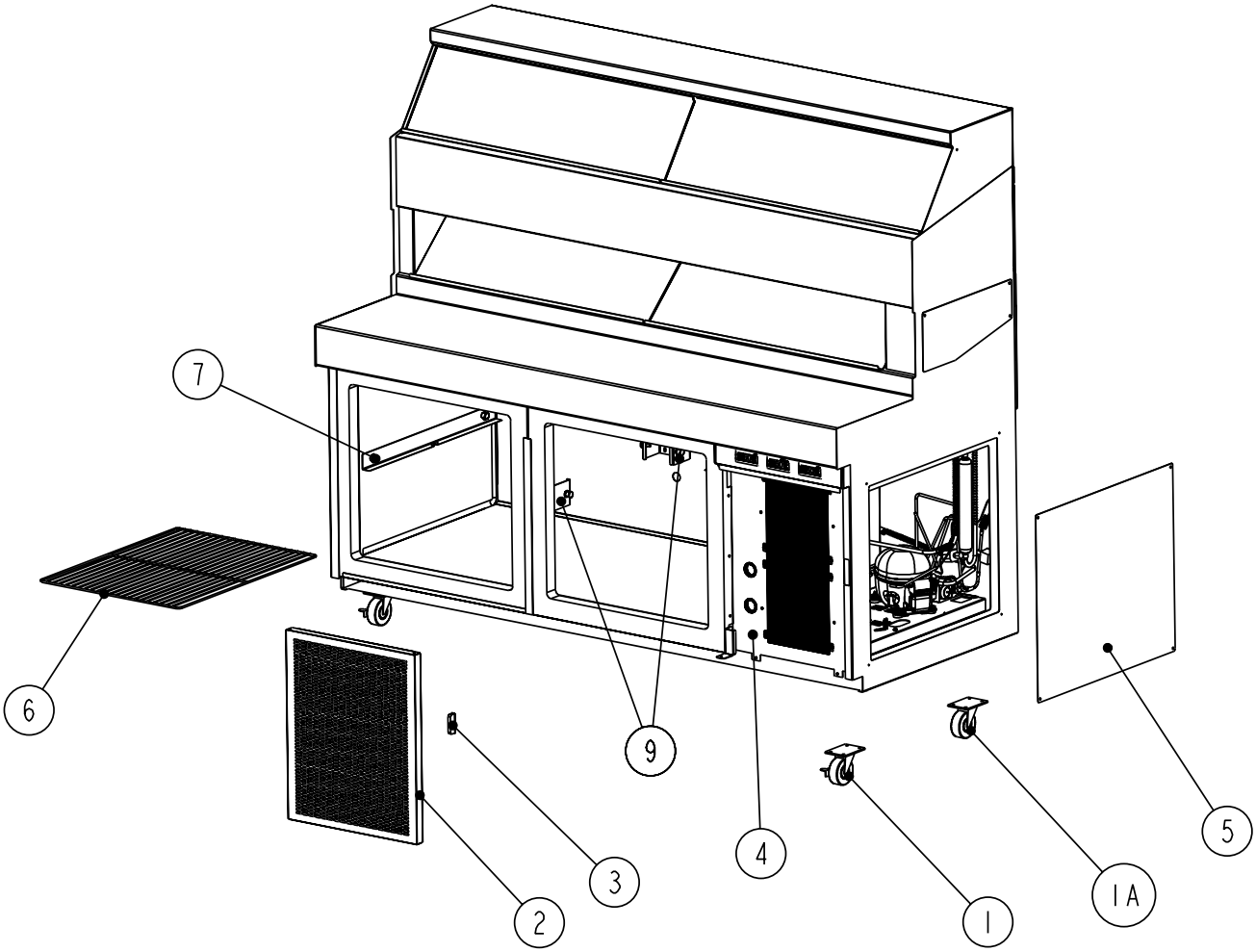

ITEM	SERVICE PART	DESCRIPTION	8148D-290	8272D-290	8396D-290
1	HD CST040HD	4" CASTERS W/ BRAKE	X	X	X
1A	HD CST041HD	4" CASTERS W/O BRAKE	X	X	X
2	RP LVR1903	LOUVER, HINGED	X	X	X
2A	RP LVR1904	LOUVER, HINGED	-	-	-
3	HD CTH9901	LOUVER MAGNET	X	X	X
4	RP SHD1901	SHROUD, COIL	X	X	X
4A	RP SHD1902	SHROUD, COIL	-	-	-
5	RP PNL1803	COVER, ACCCESS SIDE CMPR, L OR R	X	X	X
6	HD SHL180	SHELF 22" X 25"	-	X	X
6A	HD SHL060	SHELF, 19-1/8" X 25-1/4"	X	-	X
6B	HD SHL9912	SHELF 16.15" X 25"	-	-	-
7	HD PIN0102	SHELF SUPPORT PIN	X	X	X
8*	RP BRK0107	SHELF SUPPORT - FRT & BACK	-	-	X
9	RP BRK0108	SHELF SUPPORT BETWEEN DOORS	-	X	X
10*	RP BRK1811	LOUVER MOUNTING HINGE BRACKET	X	X	X
11*	EL WIR1703	POWER CORD 16/3 - 9' - 90	X	X	X
12*	HD LEG9902	6" LEG W/ BULLET FOOT	X	X	X

* = NOT SHOWN

FAN ASSIST

CALL FACTORY FOR REPLACEMENT PARTS:
888-994-7636

Parts List

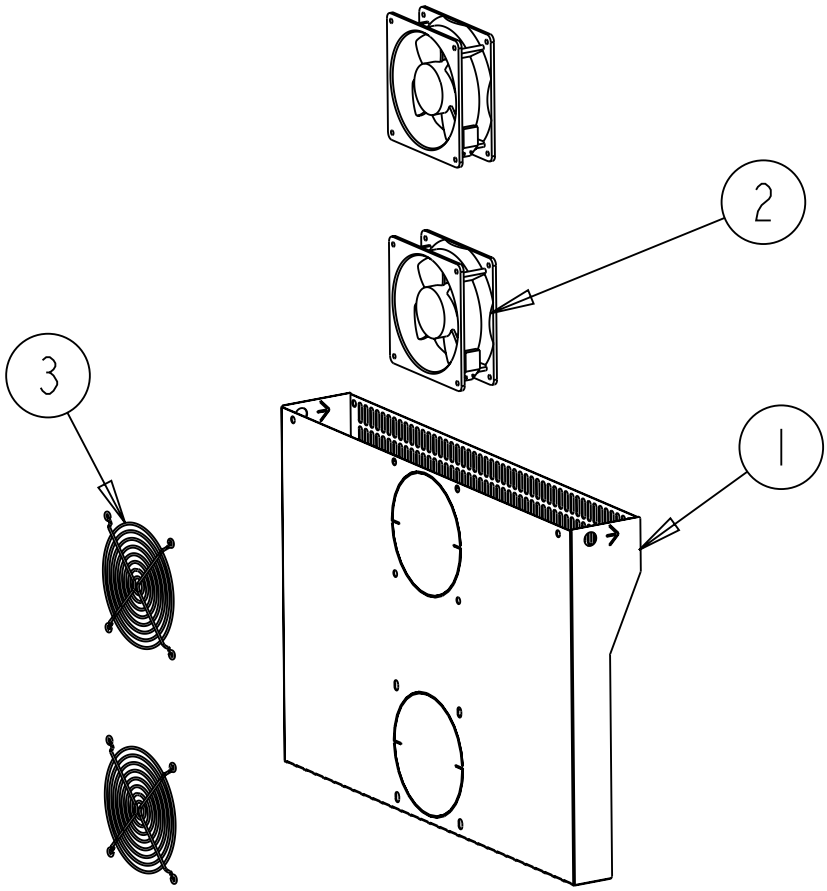

ITEM	SERVICE PART	DESCRIPTION	8148D-290	8272D-290	8396D-290
1	RP FAN1801	FAN ASSIST ASSY	-	-	X
2	RF FAN1401	FAN ASSIST MOTOR	-	-	X
3	RF FAN0702	FAN ASSIST FAN GUARD	-	-	X

* = NOT SHOWN

MECH COMPARTMENT - DOUBLE COMPRESSOR

CALL FACTORY FOR REPLACEMENT PARTS: 888-994-7636

Parts List

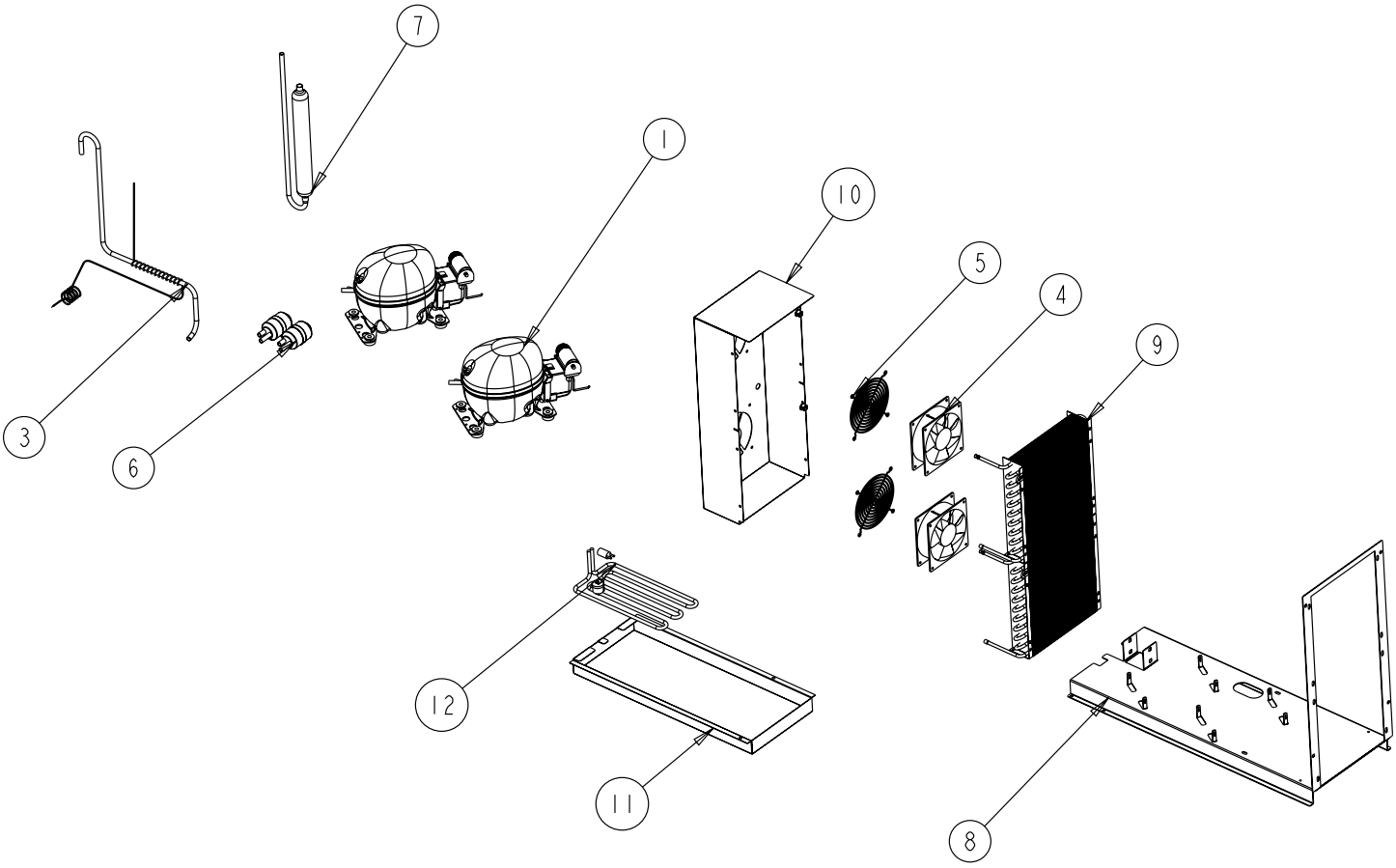

ITEM	SERVICE PART	DESCRIPTION	8148D-290	8272D-290	8396D-290
1	RF CMP1604	COMPRESSOR, 1/4 HP, R290, EMBRACO, 115V-60HZ	X	X	X
2*	RF CMP1604SC	COMPRESSOR, START COMPONENTS	X	X	X
3	RP CAP1802	CAP, TUBE - BOTTOM RAIL	X	X	X
4	RF FAN0601	CONDENSER FAN	X	X	X
5	HD GRD1610	FAN GUARD	X	X	X
6	RF FLT251	FILTER DRIER, 1/4" DBL INLET	X	X	X
7	RF ACM1701	ACCUMULATOR	X	X	X
8	RP MNT1803	COMPRESSOR ASM STAND (T07-1168)	X	X	X
9	RF COI1603	CONDENSER COIL	X	X	X
10	RP SHD1810	CONDENSER FAN SHROUD (T07-1169)	X	X	X
11	RP CPN1803	DRAIN PAN (T07-1170)	X	X	X
12	EL WIR274	HEATER, DRAIN PAN	X	X	X
13*	EL WIR470	POWER CORD, 16GA 2' MALE	X	X	X
*	RF CMP1702	COMPRESSOR, 1/3HP, R290	X	X	X

* = NOT SHOWN

EVAPORATOR COIL

CALL FACTORY FOR REPLACEMENT PARTS:
888-994-7636

Parts List

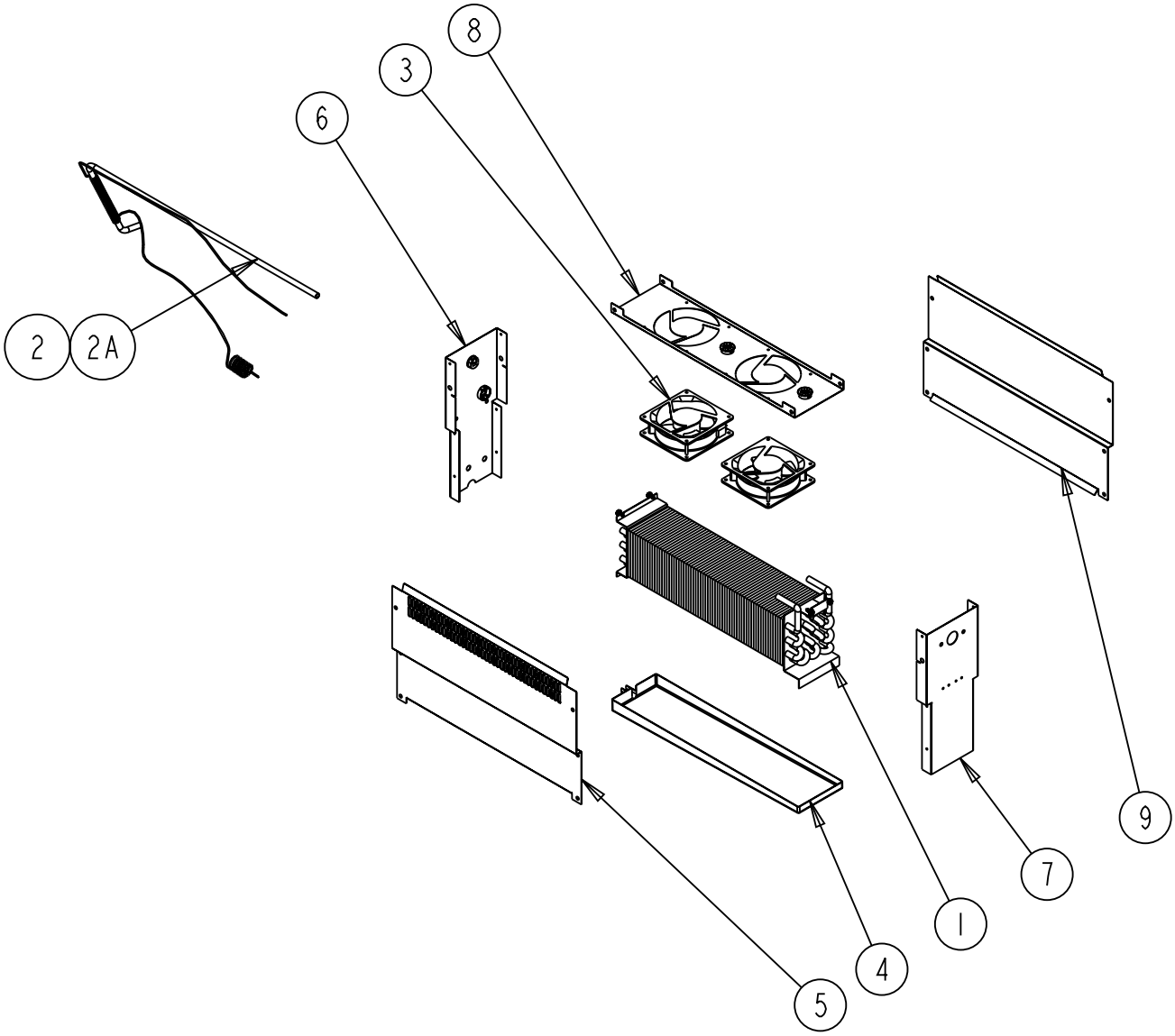

ITEM	SERVICE PART	DESCRIPTION	8148D-290	8272D-290	8396D-290
1	RF COI107	EVAPORATOR COIL	X	X	X
2	RP CAP1804	CAP, TUBE - BASE	-	X	X
2A	RP CAP1803	CAP, TUBE - BASE	X	-	-
3	RF FAN1401	FAN, EVAPORATORS	X	X	X
4	RP DRP107	EVAPORATOR DRAIN PAN	X	X	X
5	RP PNL107-290	SIDE, COIL, 8000N COMMON	X	X	X
6	RP PNL108-290	BACK, COIL, 8000N COMMON	X	X	X
7	RP PNL109-290	FRONT, COIL, 8000N COMMON	X	X	X
8	RP SHD1811	PLATE, FAN, 8000N COMMON	X	X	X
9	RP PNL1804	SIDE, COIL, NO PERF, 8000N COMMON	X	-	-

* = NOT SHOWN

DOOR ASSEMBLY

CALL FACTORY FOR REPLACEMENT PARTS:
888-994-7636

Parts List

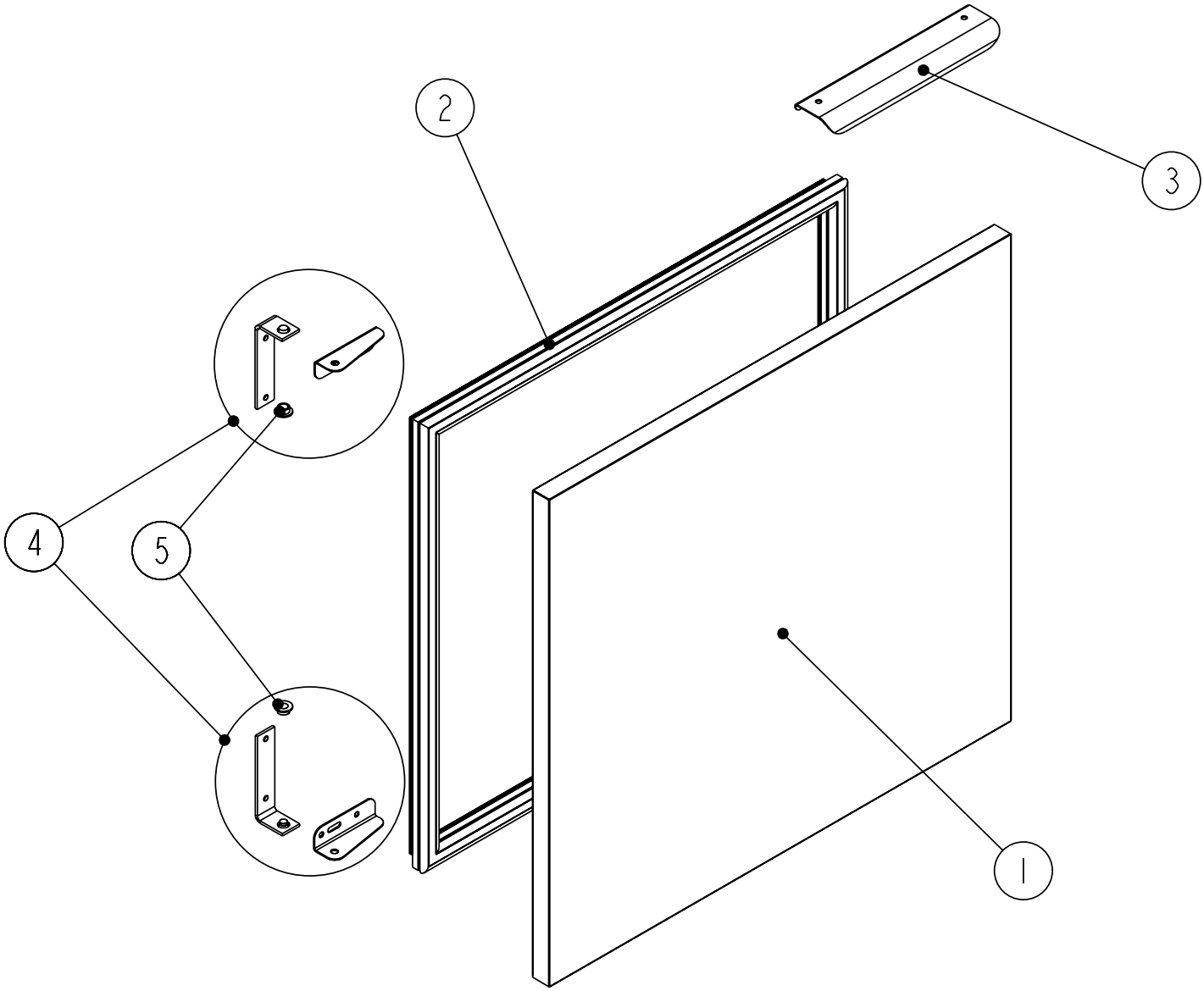

ITEM	SERVICE PART	DESCRIPTION	8148D-290	8272D-290	8396D-290
1	RF DOR0321	DOOR HINGED LEFT, 21"	-	-	-
1A	RF DOR0320	DOOR HINGED RIGHT, 21"	-	-	-
1B	RF DOR0323	DOOR HINGED LEFT, 24"	X	-	X
1C	RF DOR0322	DOOR HINGED RIGHT, 24"	X	-	X
1D	RF DOR0324	DOOR HINGED LEFT, 27"	-	X	X
1E	RF DOR0325	DOOR HINGED RIGHT, 27"	-	X	X
2	IN GSK9902	GASKET, 18.5" X 24.5" PUSH IN	-	-	-
2A	IN GSK1025	GASKET, 21.75" X 24.5" PUSH IN	X	-	X
2B	IN GSK1030	GASKET, 24.5" X 24.5" PUSH IN	-	-	X
3	RP HDL037	DOOR HANDLE	X	X	X
4	RP HNG9900	HINGE ASSY, UNIVERSAL, LEFT/RIGHT	X	X	X
5	HD BSH050	BUSHING, NYLON DOOR	X	X	X
6*	RP HNG025	HINGE, SPRING LOAD ASSEMBLY	X	X	X

* = NOT SHOWN

DRAWER ASSEMBLY

CALL FACTORY FOR REPLACEMENT PARTS:
888-994-7636

Parts List

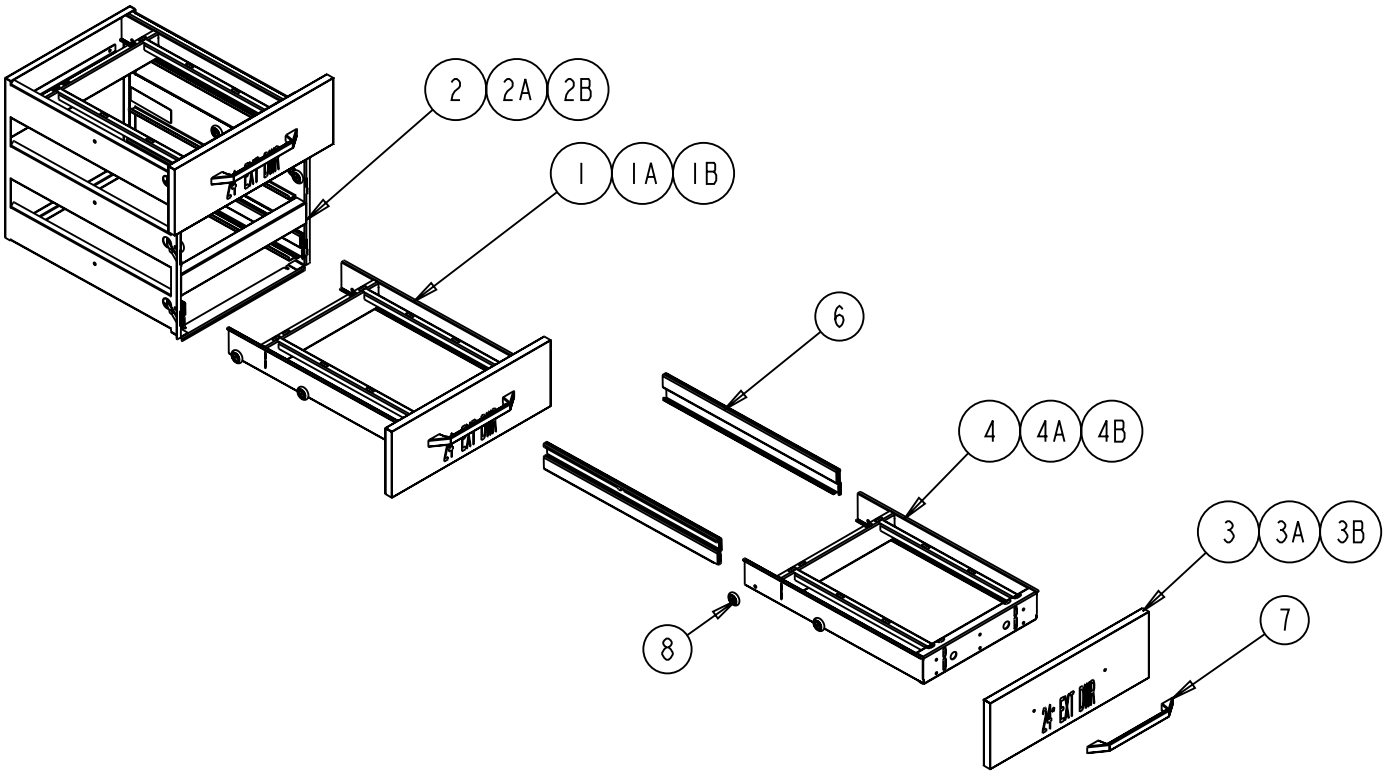

ITEM	SERVICE PART	DESCRIPTION	8148D-290	8272D-290	8396D-290
1	RP DRW0206	DRAWER ASSEMBLY - 21"	-	-	-
1A	RP DRW0201PT	DRAWER ASSEMBLY - 24"	X	-	X
1B	RP DRW0202	DRAWER ASSEMBLY - 27"	-	X	X
2	RP MOD050A	DRAWER CARTRIDGE - 21"	-	-	-
2A	RP MOD030A	DRAWER CARTRIDGE - 24"	X	-	X
2B	RP MOD029A	DRAWER CARTRIDGE - 27"	-	X	X
3	RF FRT9903	DRAWER FRONT - 21"	-	-	-
3A	RF FRT9904	DRAWER FRONT - 24"	X	-	X
3B	RF FRT9905	DRAWER FRONT - 27"	-	X	X
4	RP FRM0301	DRAWER FRAME - 21"	-	-	-
4A	RP FRM0302	DRAWER FRAME - 24"	X	-	X
4B	RP FRM0303	DRAWER FRAME - 27"	-	X	X
5*	IN GSK9903	DRAWER GASKET - 18.75"	-	-	-
5A*	IN GSK1041	DRAWER GASKET - 21.75"	X	-	X
5B*	IN GSK1046	DRAWER GASKET - 24.75"	-	X	X
6	RP TRK05SM	DRAWER TRACKS (1L & 1R)	X	X	X
7	HD HDL130	DRAWER HANDLE	X	X	X
8	HC BRG210	DRAWER BEARING	X	X	X
9*	FA SCW5002	DRAWER BEARING BOLT	X	X	X

* = NOT SHOWN

DRAIN ASSEMBLY

CALL FACTORY FOR REPLACEMENT PARTS:
888-994-7636

Parts List

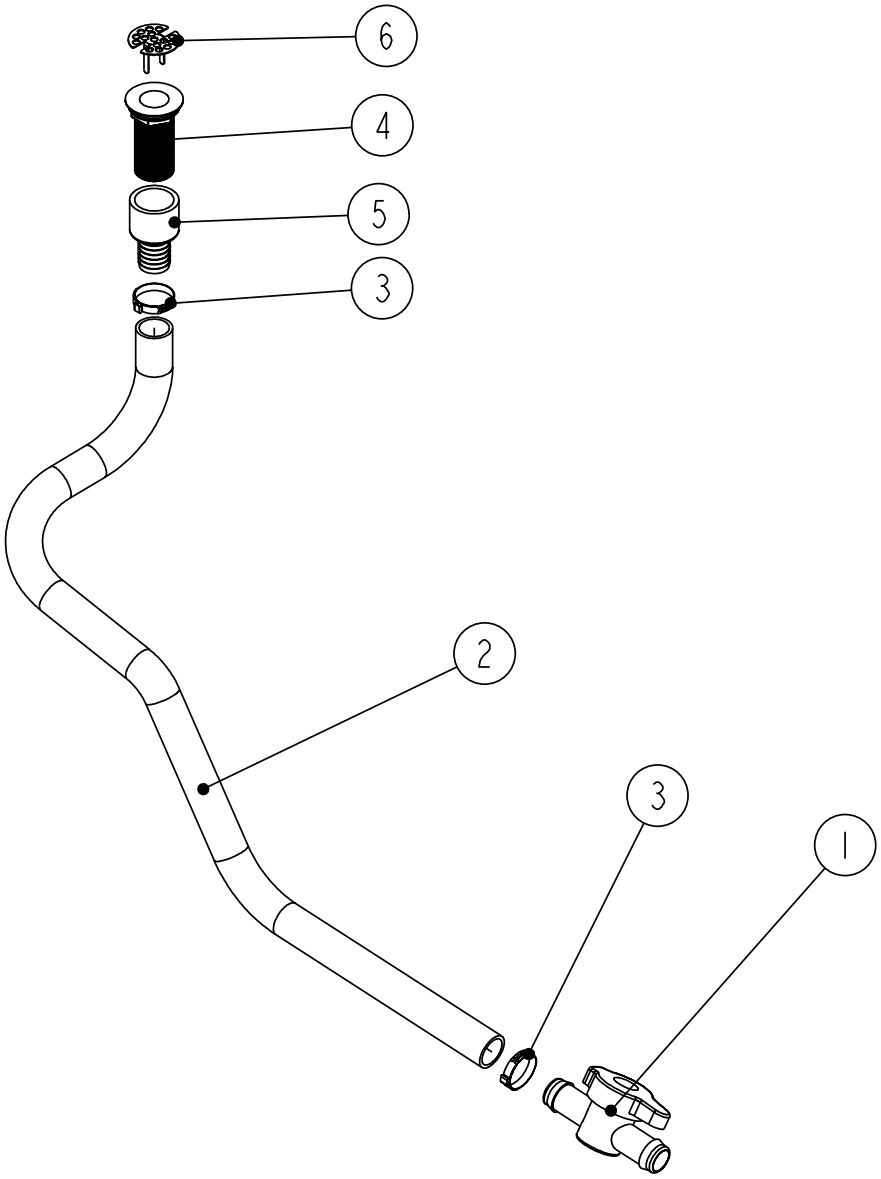

ITEM	SERVICE PART	DESCRIPTION	8148D-290	8272D-290	8396D-290
1	PB VLV1803	VALVE, GREEN BACK, 25 MM	X	X	X
2	PL TBG1801	TUBING, 1” VINYL, BLACK	X	X	X
3	HD CLM1801	CLAMP, 1-1/4” OETIKER	X	X	X
4	HD DRN1702	DRAIN, ABS, GRAY, 1.375", 1.00" NPS X 2.875" LG W/NUT & WASHER	X	X	X
5	PB ADP1802	ADAPTOR, 1" X 1" ST, INSERT X FPT, LASCO	X	X	X
6	RP DSN0101	DRAIN SCREEN 9000 SERIES SIDEM	X	X	X
7*	HD CLP1902	CLIP, SPRING, 1 TO 1-7/8 NICKEL PLATED STEEL	X	X	X
8*	PB ELB1801	ELBOW, 90 DEG	X	X	X
9*	EL GRM1801	GROMMET, PUSHON, DRAIN ASSY	X	X	X

* = NOT SHOWN

RAIL ASSEMBLY

CALL FACTORY FOR REPLACEMENT PARTS:
888-994-7636

Parts List

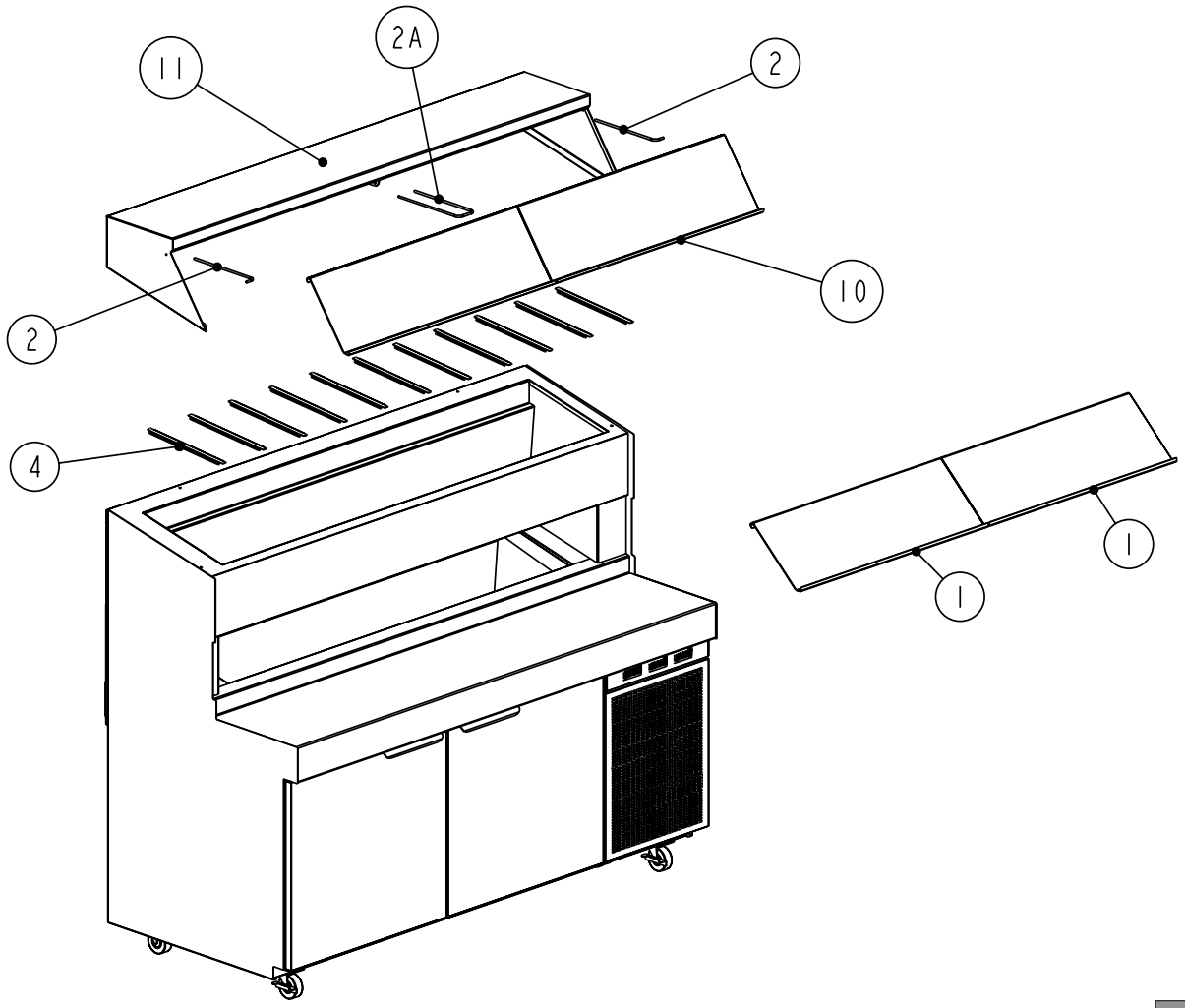

ITEM	SERVICE PART	DESCRIPTION	8148D-290	8272D-290	8396D-290
1	RP LID1902	COVER	X	-	-
1A	RP LID1904	COVER	-	X	-
1B	RP LID1906	COVER	-	-	-
1C	RP LID1908	COVER	-	-	-
1D	RP LID1910	COVER	-	-	X
2	HD ROD100	HOOD COVER, ROD W/ SINGLE BEND	X	X	X
2A	HD ROD200	HOOD COVER, ROD W/ DOUBLE BEND	X	X	X
3*	HD PIN107	PIN, THREADED SOUTHCO	X	X	X
4	RP BAR1325	BAR, ADAPTER 12.75" X 7/8", 8000N TPT_1AB_1	X	X	X
5*	RP DSN001	DRAIN SCREEN, 2"	X	X	X
6*	HD PIN001	PIN, KEY PAN RAIL	X	X	X
7*	HD PIN0101	PIN, LOCATING 0.875 LENGTH	X	X	X
8*	FA NUT0403SS	NUT, 1/4-20 CAP NUT 18-8 SS	X	X	X
10	RP LID1901	COVER, HINGED PAN	X	-	-
10A	RP LID1903	COVER, HINGED PAN	-	X	-
10B	RP LID1905	COVER, HINGED PAN	-	-	-
10C	RP LID1907	COVER, HINGED PAN	-	-	-
10D	RP LID1909	COVER, HINGED PAN	-	-	X
11*	Consult Factory	HOOD ASSEMBLY	X	X	X

* = NOT SHOWN

Wiring Diagram

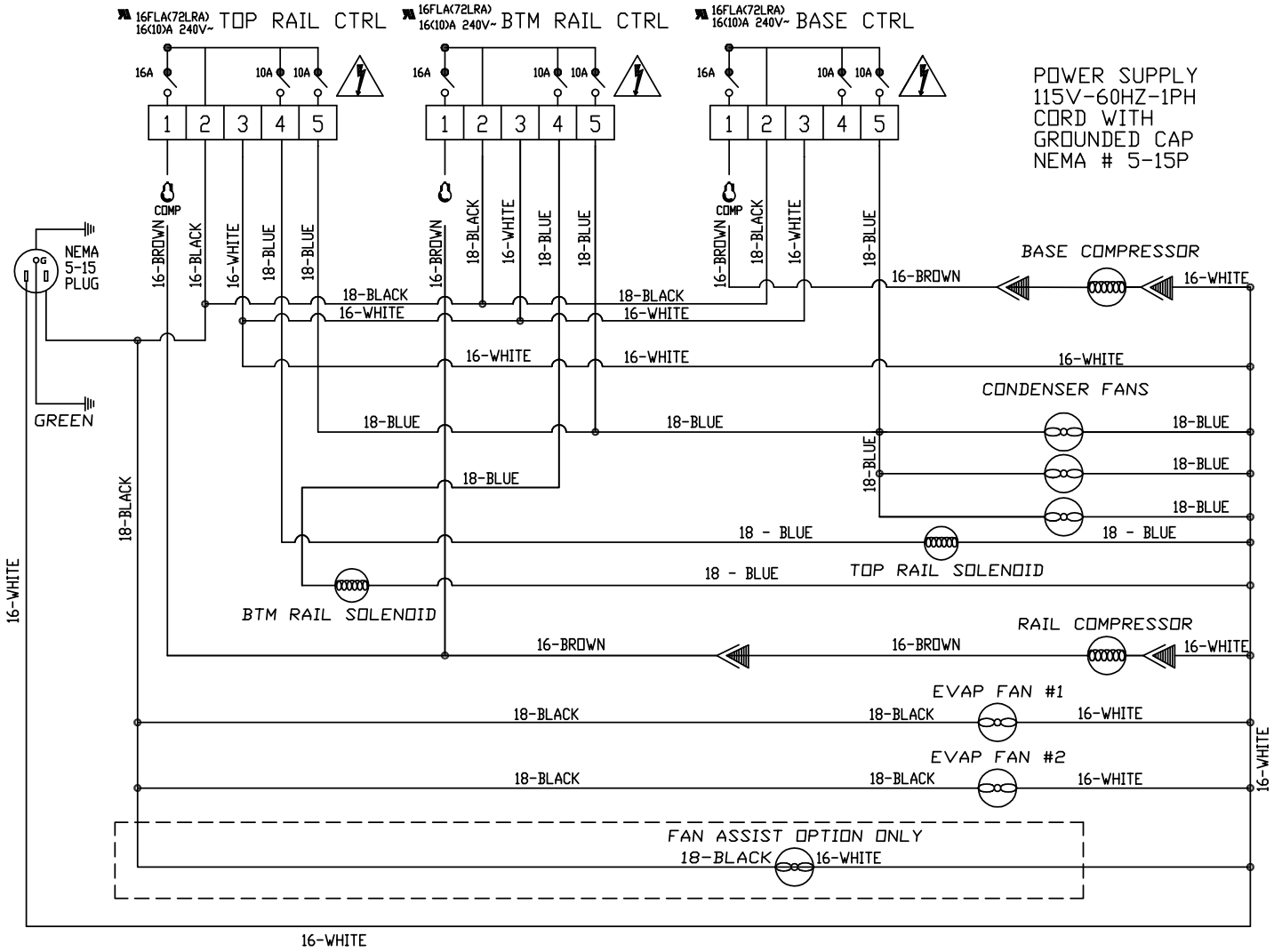

NOTE:
BLUE (EVAP COIL) = S2
BLACK (AIR) = S1

ELECTRICAL DIAGRAM
8000D-290 SERIES - DOUBLE CMPR
DANFOSS ERC112C CONTROL

Service Log

Model No:	Purchased From:
Serial No:	Location:
Date Purchased:	Date Installed:
Purchase Order No:	For Service Call:

Date	Maintenance Performed	Performed By